EMS
Turnkey Waste
Recycling Solutions

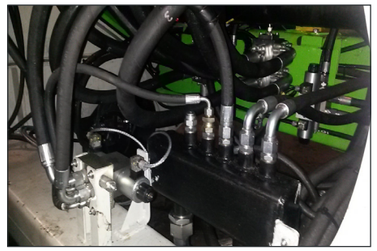

EMS
Turnkey Waste
Recycling Solutions

MOBILE SHREDDER
SRS5000

Ever evolving legislation has called for more efficient methods of reducing the accumulation of waste gathering at Landfills. EMS's "SRS5000" Shredder tackles the toughest of waste materials, breaking material down to easily manageable and transportable sizes. EMS Ltd.'s SRS 5000 shredder can handle your application requirements. Commercial and industrial waste, bulky waste, production waste, rejects, paper, wood waste and textiles. EMS Ltd.'s shredding equipment is designed for every stage of the process and are custom-built to meet your individual needs. Our shredder can be used for numerous waste streams. With superior twin shafts our Shredder is tough enough to meet the stringent demands of any industry.

Environmental Marketing Solutions Ltd.
Unit 3, 110 Trewmount Road
Killyman, Dungannon
Co. Tyrone
N. Ireland. BT71 7EF

Tel: + 44 (0) 28 8778 9535
Fax: + 44 (0) 28 8778 9657
eMail: sales@emswasterecycle.com
Web: www.emswasterecycle.com

Inline with our policy of continuous product improvement EMS Ltd reserves the right to modify the aforementioned information without prior notification.

www.emswasterecycle.com

EMS
Turnkey Waste
Recycling Solutions

SPECIFICATIONS

MOBILE SHREDDER
SRS5000

DESCRIPTION
Heavy duty track mounted Shredder with following features:
Throughput up to 50 TPH
Fully remote controlled.
Self-cleaning twin shaft shredder box
440 HP C13 CAT ENGINE
Track or Stationary option
Integrated hydraulic tipping hopper.
Integrated hydraulic folding stockpiling conveyor.
Heavy plate fabricated chassis.
Open chassis design for ease of maintenance access.
Fast setup time.

DIMENSIONS AND WEIGHTS

Length-working	11436mm
Length-transport	9224mm
Width-working	2750mm
Width-transport	2750mm
Height-working	4373mm
Height-transport	3788mm
Weight	35 tonne

FLUIDS CAPACITIES

Diesel tank capacity	500 Litres
Hydraulic tank capacity	600 Litres

SHREDDING BOX

Dimensions	2060 x 2325 x 870
Final product - fine	~150mm
Final product - coarse	~-300mm
Shaft speed	Up to 42rpm
Shaft Drive	Diesel Hydraulic
Motor (per shaft)	250cc Variable Piston Motor
No of Cutting Knives	18
Flow rate (max, per motor)	10.5 Litres per min
Load sensor	Hydraulic

TIPPING FEEDER

Feeder capacity	3.5 cubic metres
Operation	Hydraulic (remote controlled)
Tipping Speed	6 sec
Retract Speed	6 sec

MAIN CONVEYOR

Stockpile height	4000mm
Belt width	1200mm (48")
Belt spec	Heavy duty, 3ply, chevron 750 pitch
Twin Hydraulic Motor Drive	Yes
Maximum speed	3mts per sec
Angle adjustable	Yes
Hydraulic Folding	Yes

POWERUNIT AND HYDRAULICS

Engine	CAT C 13
Engine power	440 HP
Engine speed	1800-2000 rpm
Twin Splitter Gearbox	130cc per revolution
LH PTO Pump 2	130cc
Total system flow	500 Litres per min
Hydraulic tank capacity	600 Litres per min
Hydraulic Oil Cooling	Yes

ELECTRICS

Emergency stops	5 off , 2 feeder, 2 power units, 1 control panel.
Chassis cabling	Armoured cable
Start Siren	YES-10 sec delay
Control panel	JMG
Engine shutdowns:	Low oil pressure High water temp Air filter blockage Overload Low hydraulic tank level High hydraulic oil temperature
Radio control tracks	Hetronic system
Umbilical track control	YES- plugged in control cabinet

TRACKS

Width	400mm
Length	3959mm centres
Height	739mm
Gearbox	Brevini CTU3300
Ratio	145.5:1
Motor	55cc integrated hydraulic motor
Speed max	1.8 Kph (1.1 Mph)
Attachment to chassis	Bolt On for quick change

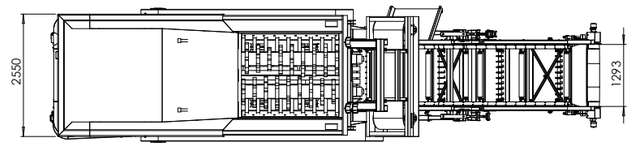

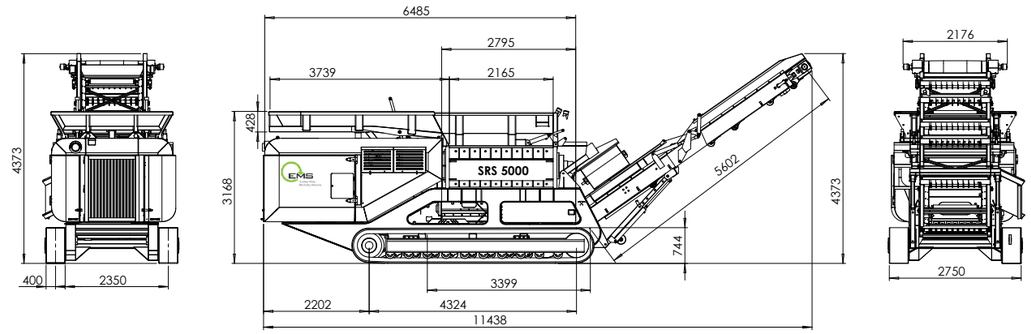

OPTIONS
Main conveyor variable speed control
Interlock system
Overband magnet
Fire Protection
Remote Monitoring System
Belt Scale

SAFETY FEATURES
External belt alignment points
External grease points
Engine safety shutdown systems
Full safety guarding for nip points
Beacon Sounder

STATIC OPTIONS AVAILABLE

Environmental Marketing Solutions Ltd.
Unit 3, 110 Trewmount Road
Killyman, Dungannon
Co. Tyrone
N. Ireland. BT71 7EF

Tel: + 44 (0) 28 8778 9535
Fax: + 44 (0) 28 8778 9657
eMail: sales@emswasterecycle.com
Web: www.emswasterecycle.com

Inline with our policy of continuous product improvement EMS Ltd reserves the right to modify the aforementioned information without prior notification.